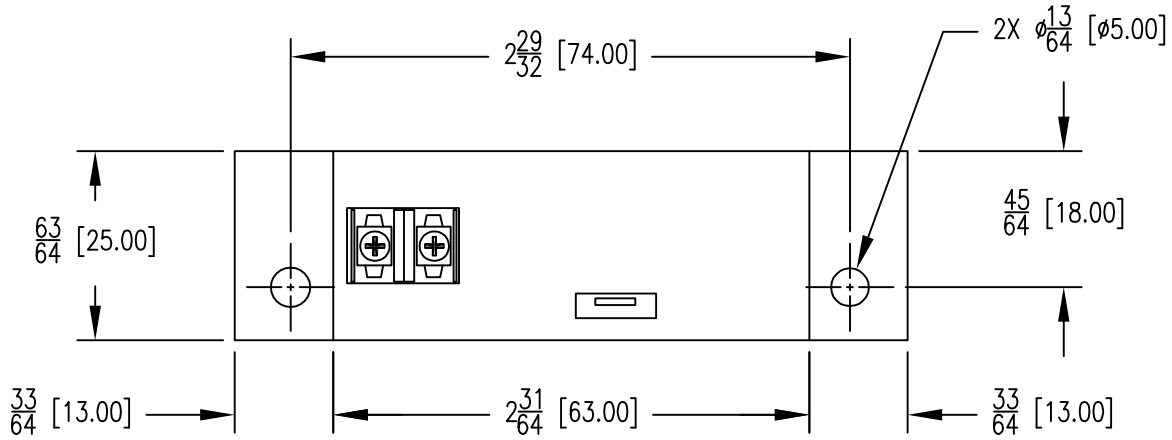

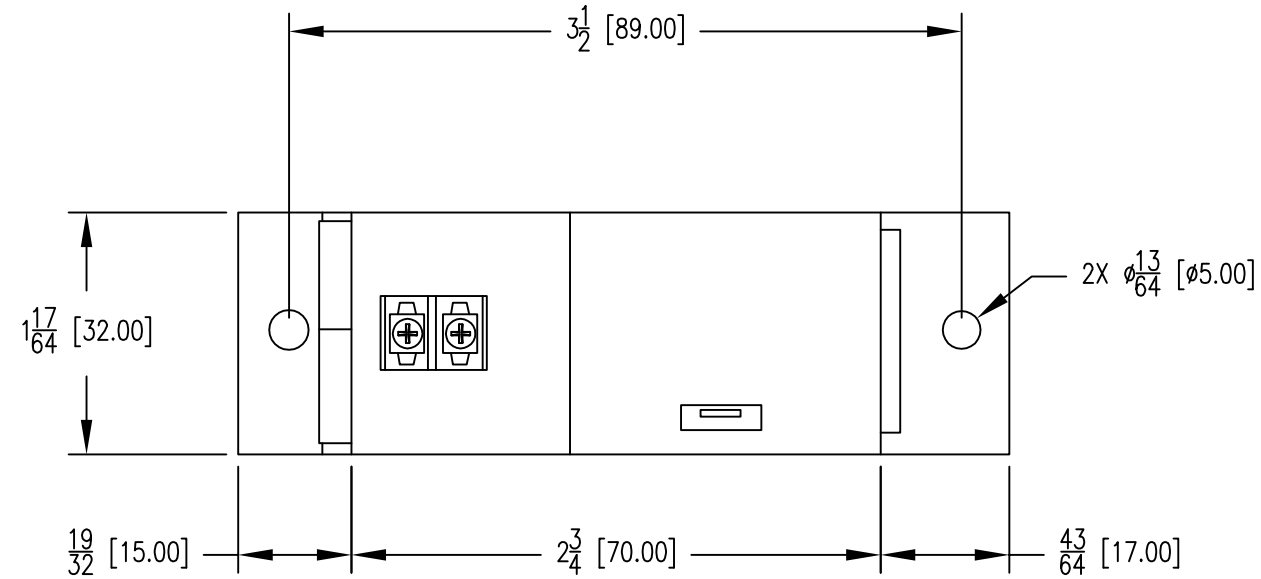

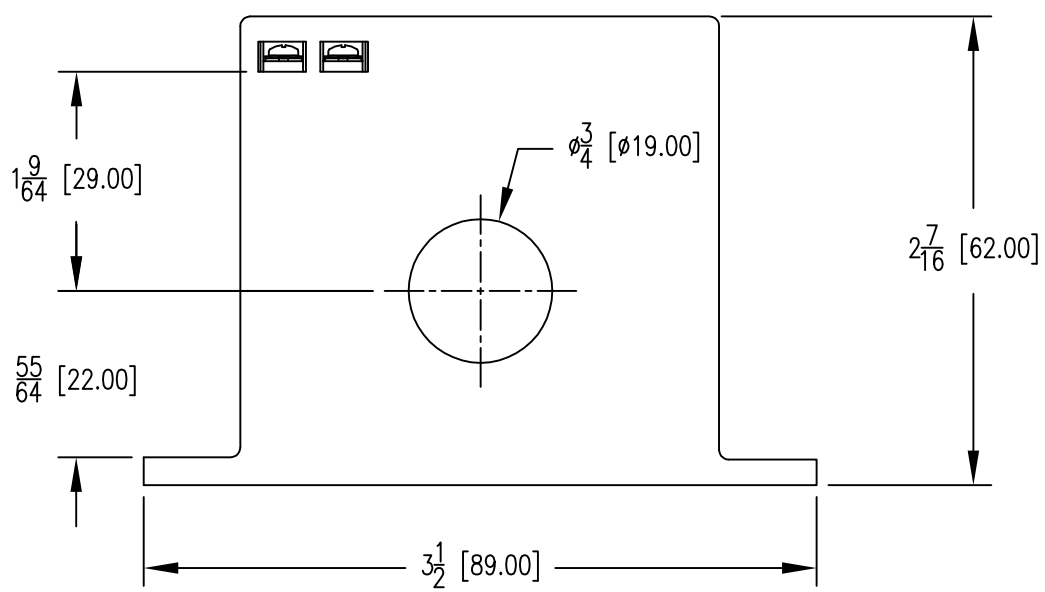

SOLID MODELS

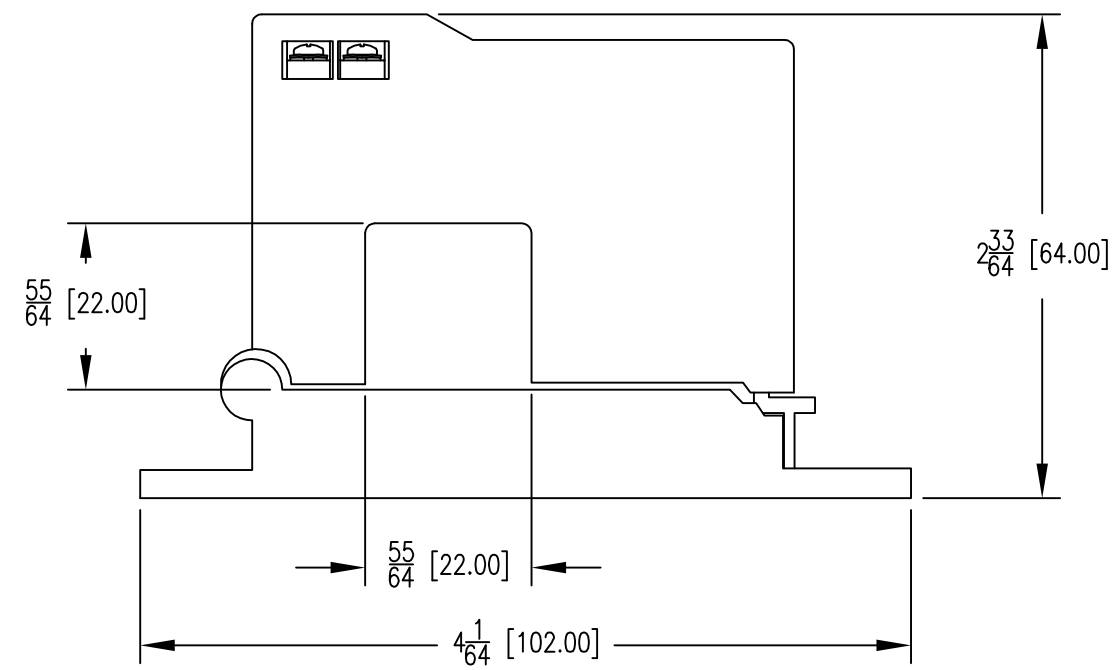

SPLIT MODELS

(CD) = CRITICAL DIMENSION

STANDARD TOLERANCES UNLESS NOTED:
ALL DECIMAL DIMENSIONS ± .005
ALL ANGLES ± 1°

SCALE 1:1

NO.	CHANGES	BY/DATE

DATE	
DWN BY	
CHKD	
APPD	

NAME: CCT SERIES CURRENT SENSORS

ACAD2002

MATERIAL

FINISH

DWYER INSTRUMENTS, INC.
MICHIGAN CITY, INDIANA 46360 U.S.A.

FR. NO.

NOTICE: This drawing and the principles and elements of design embodied therein are the exclusive property of DWYER INSTRUMENTS, INC. and are not to be communicated, disclosed, reproduced or used except as previously authorized in writing by such corporation and must not be submitted to outside parties for examination without the written consent of said corporation.