"A"	FITTING	MODEL
3-27/64	1/8	GV03-GV06
3-13/16	1/4	GV07-GV09

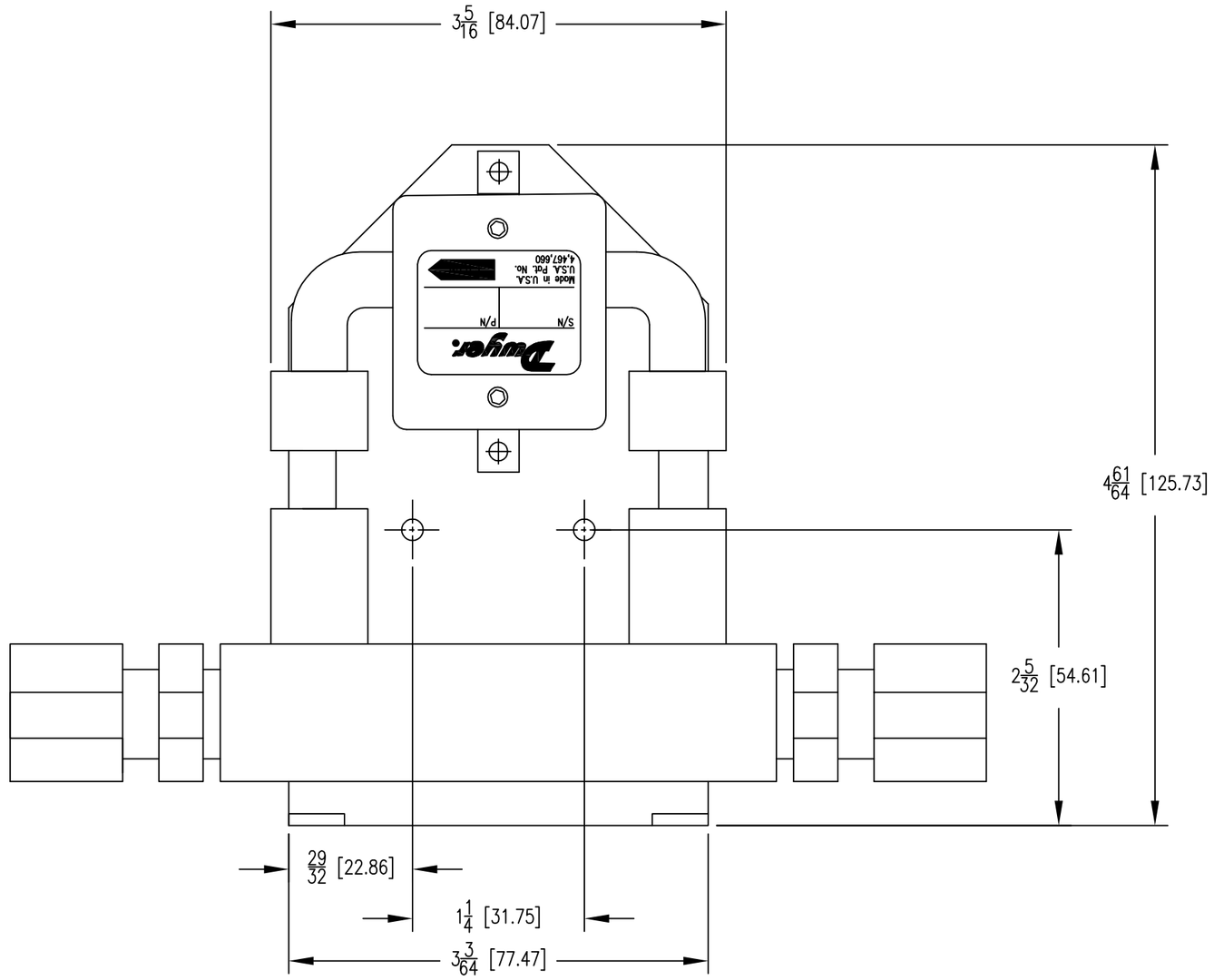

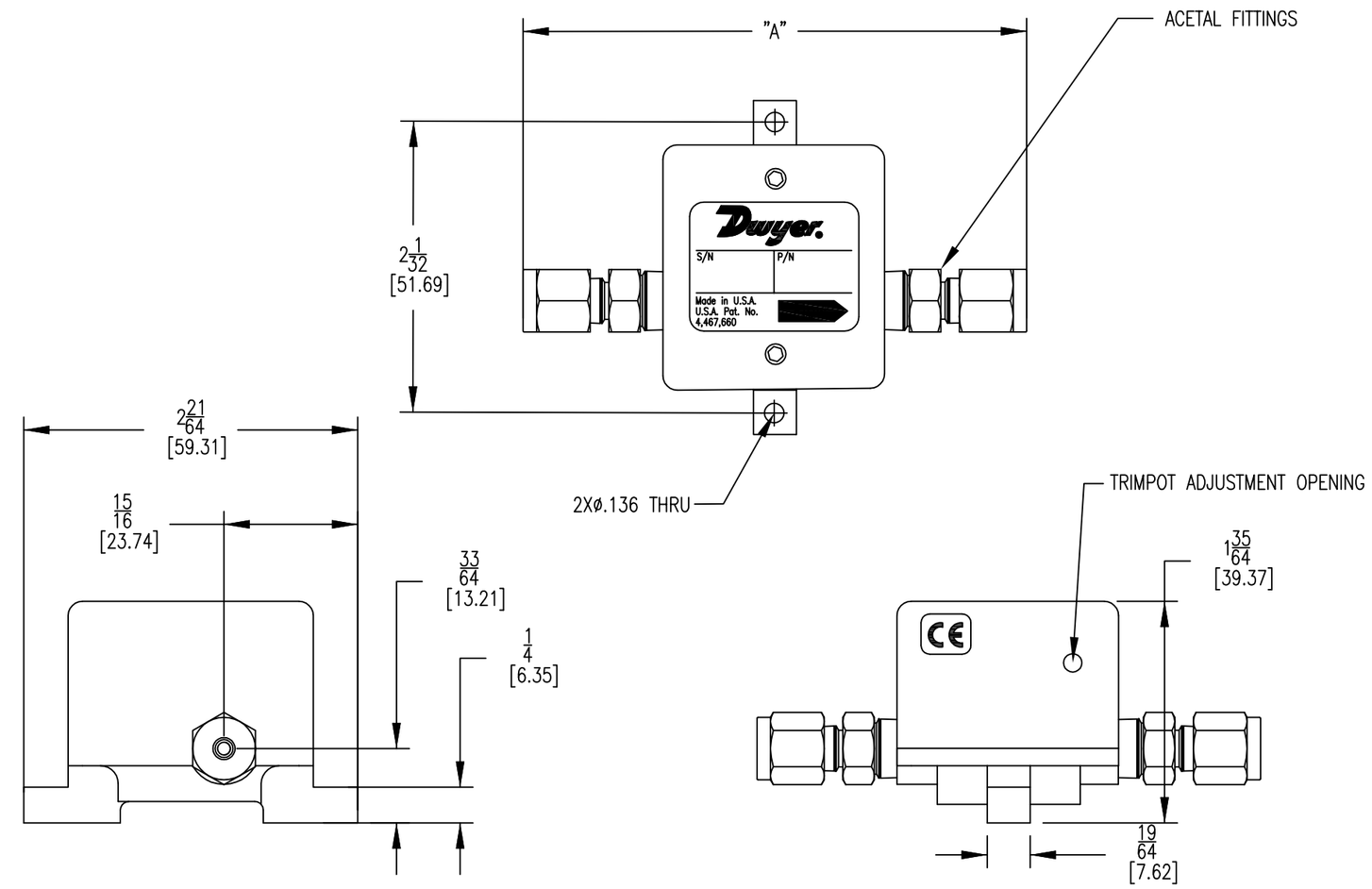

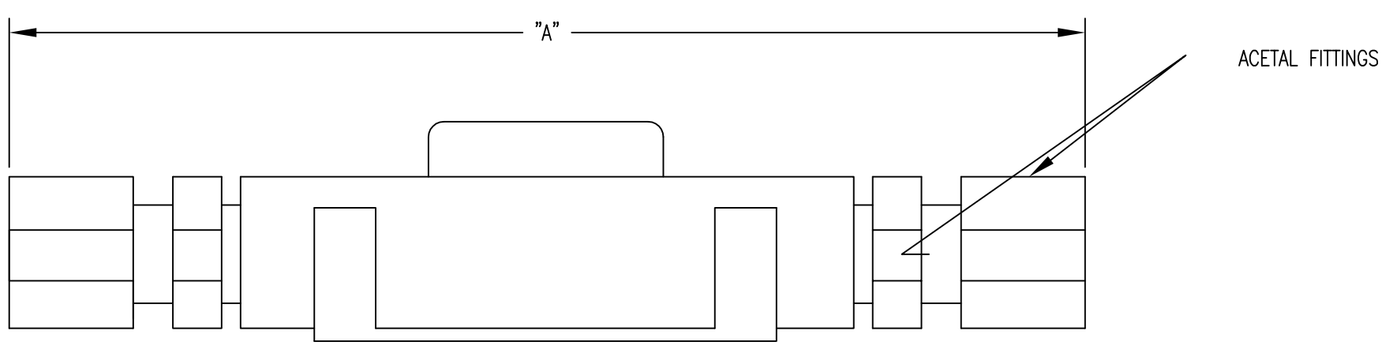

"A"	FITTING	MODEL
7-7/64	3/8	GV10, GV11
7-1/2	1/2	GV12, GV13

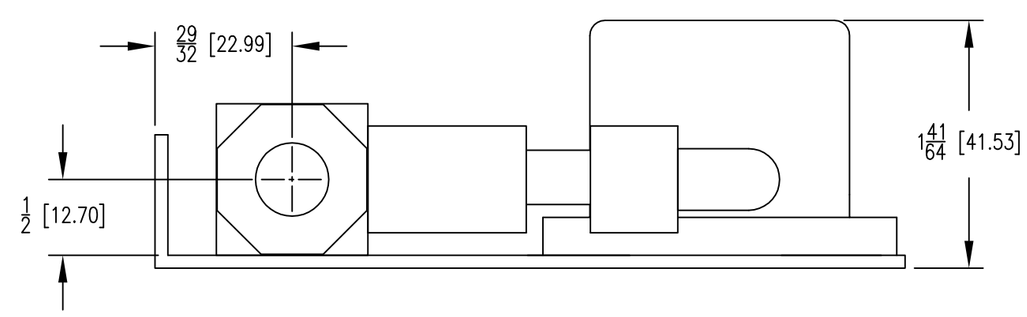

(CD) = CRITICAL DIMENSION
STANDARD TOLERANCES UNLESS NOTED:
ALL DECIMAL DIMENSIONS ± .005
ALL ANGLES ± 1°

SCALE 1:1

NO.	CHANGES	BY/DATE

DATE
DWN BY
CHKD
APPD

NAME: TFP-GV SERIES GAS TURBINE FLOW METER

ACAD2002

MATERIAL
FINISH

DWYER INSTRUMENTS, INC.
MICHIGAN CITY, INDIANA 46360 U.S.A.

NOTICE: This drawing and the principles and elements of design embodied therein are the exclusive property of DWYER INSTRUMENTS, INC. and are not to be communicated, disclosed, reproduced or used except as previously authorized in writing by such corporation and must not be submitted to outside parties for examination without the written consent of said corporation.

3

FR. NO.